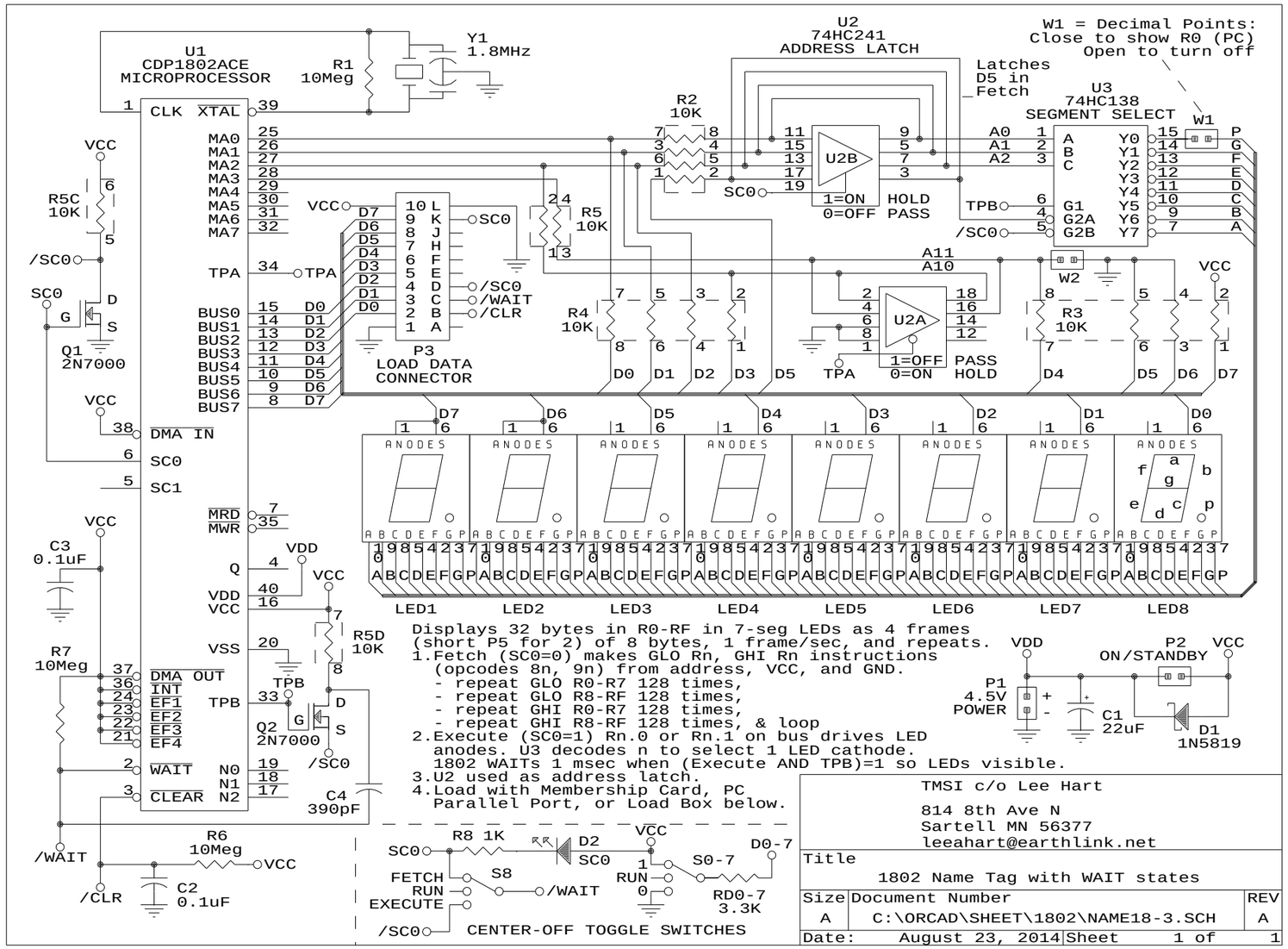

TMSI c/o Lee Hart
814 8th Ave N
Sartell MN 56377
leeahart@earthlink.net

Title
1802 Name Tag with WAIT states

Size	Document Number	REV
A	C:\ORCAD\SHEET\1802\NAME18-3.SCH	A

Date: August 23, 2014 Sheet 1 of 1