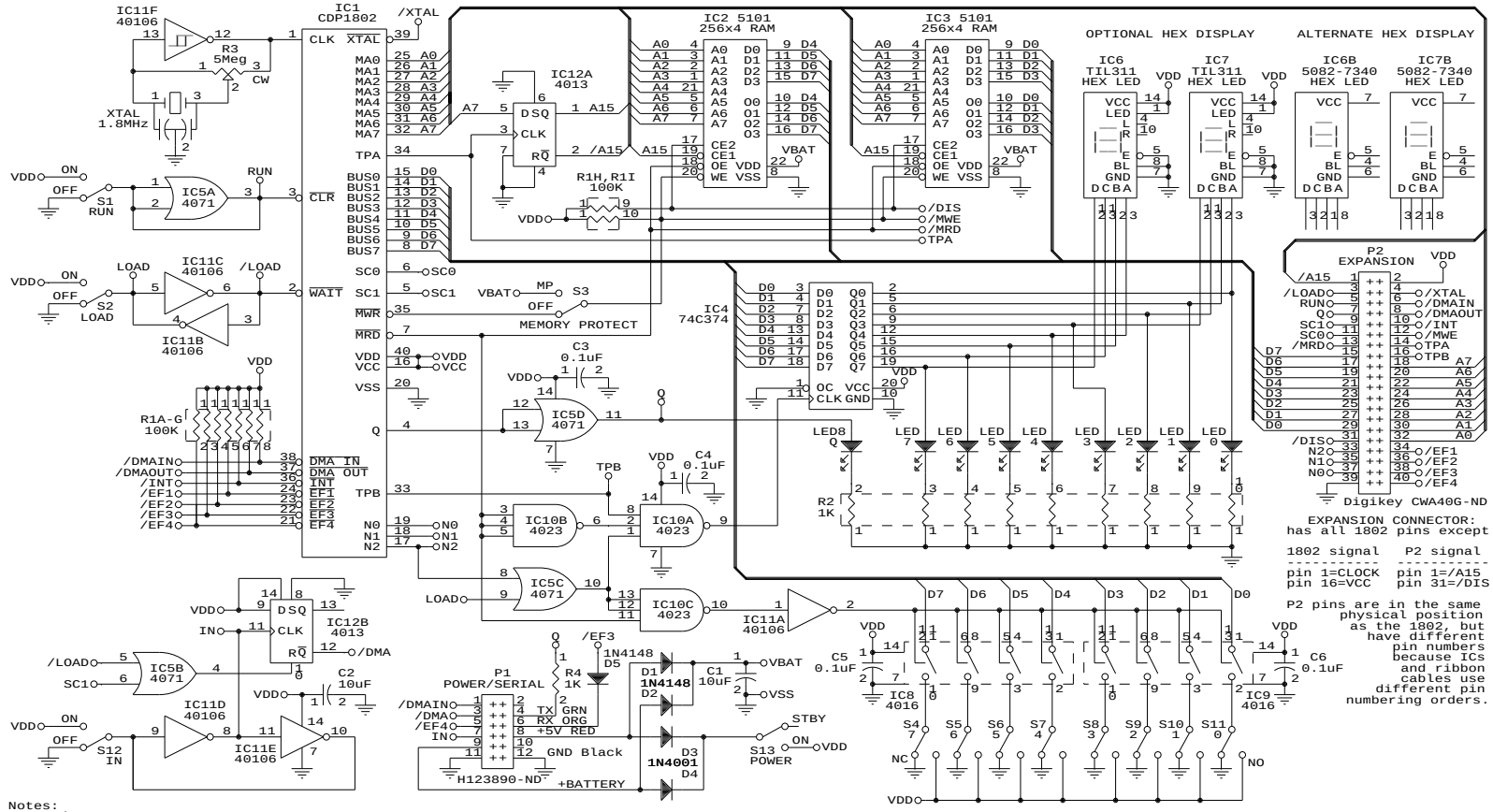

Notes:
1. Used: C1-6, D1-5, P1-2, LED0-8, R1-4, S1-13, IC1-12.
2. Toggle switches shown in "down" position, and pushbutton in "released" position.
3. Changes from original PE Elf:
   - replaced two 4050 (IC4-IC5) with 74C373 (IC4).
   - added individual data LED option. Can have data LEDs, hex LEDs, or both.
   - replaced D1-D4, R8, R9 with 4071 OR gate (IC5).
   - replaced discrete resistors with SIP networks.
   - added expansion connector (P2). Supports 64K memory, 1861, etc.
   - replaced regulator (IC13) with Power/Serial connector P1. Mates with Sparkfun FTDI USB-serial cable. P1 also has jumper options to eliminate old D5,D6, so Expansion boards can use EF4 and DMAIN.
   - added battery power/backup for RAM, and ON/OFF/STANDBY switch.
   - added bypass capacitors to power supply.
   - added A15 address latch. Makes memory expansion easier.
   - replaced crystal oscillator with adjustable schmitt-trigger oscillator (IC11F). 1.8MHz resonator supports 1861. Trimpot R4 adjusts frequency 10KHz-2MHz.

P1 DEFAULT CONFIGURATION

1. Jumper P1-1 to P1-3 to enable DMAIN for LOAD mode.
2. Jumper P1-5 to P1-7 to enable IN button to control EF4.
3. Connect 3v-6v battery (three AA cells) to P1 9-11 for battery operation/RAM backup.

TMSI c/o Lee Hart
814 8th Ave N
Sartell MN 56377
leeahart@earthlink.net

Title	VCF-ELF: A 40th anniversary COSMAC ELF	
Size B	Document Number C:\ORCAD\SHEET\1802\VCF-ELF.SCH	REV A
Date: August 29, 2016	Sheet 1 of 1	